Domestic Gas Safety PowerPoints

June 2026

Module 7

Checking and/or Setting Meter Regulators

Module 7: Checking and/or Setting Meter Regulators

The Need for Meter Regulators

- A meter regulator is used to maintain a constant working pressure of 21mbar at the meter outlet (± 2mbar)
- A meter regulator will reduce the pressure from district pressures to its set pressures and keep it constant
- The working pressure is kept constant irrespective of demand within the regulator's operating range
- This is essential for the safe and efficient operation of domestic gas appliances
- Should the pressure be too high or too low, this may affect the combustion process and may cause incomplete combustion

Module 7: Checking and/or Setting Meter Regulators

The Principles of Operation of Gas Regulators

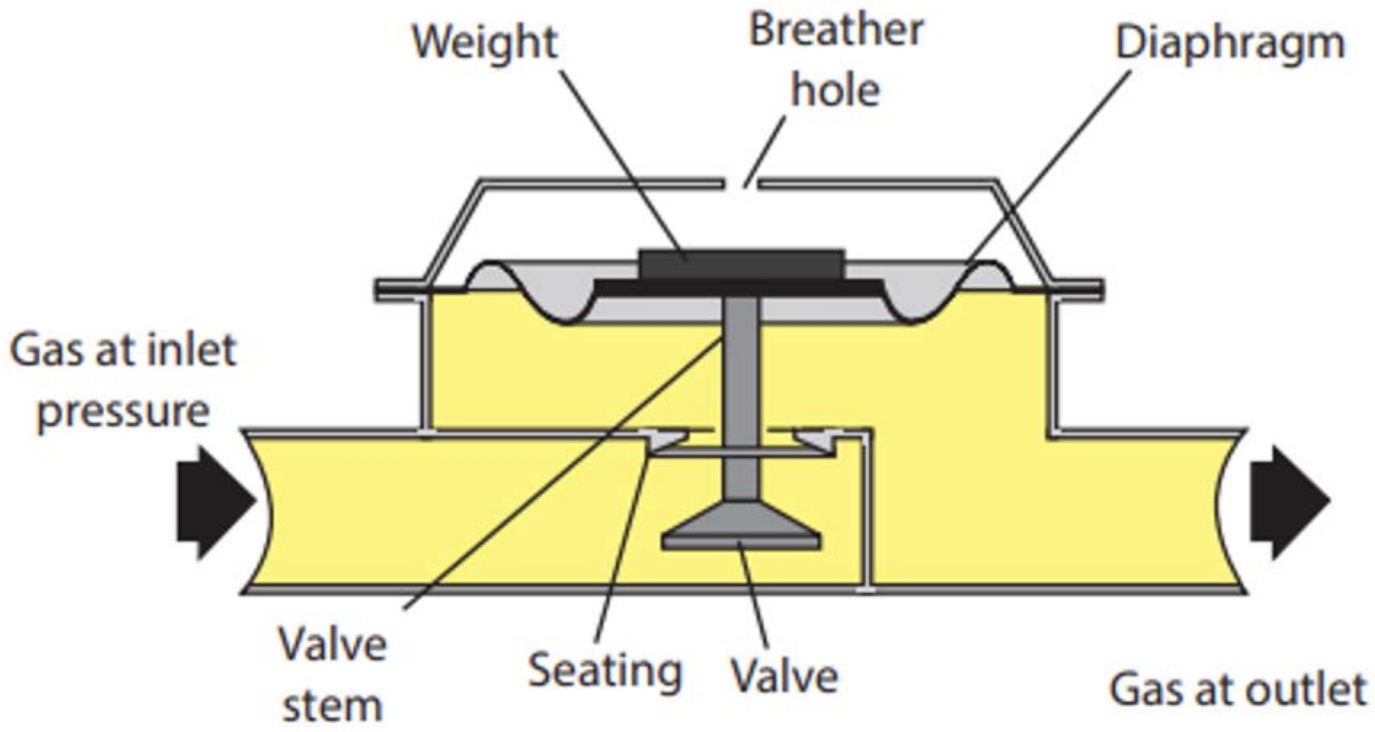

A simple constant pressure weight loaded regulator

Module 7: Checking and/or Setting Meter Regulators

Operation of the Regulator

- With appliances connected to the regulator outlet turned off, the gas is turned on to the regulator, gas flows through the inlet and pressure builds below the diaphragm and within the gas installation

- When the force of the gas pushing the diaphragm up is greater than that of the weight pushing down, the valve will close, allowing no more gas into the installation

- This state is called regulator lock-up and will not be released until the pressure in the installation is reduced, by for example an appliance being turned on.

Module 7: Checking and/or Setting Meter Regulators

Operation of the Regulator

- When an appliance is turned on, the pressure within the installation pipework and beneath the diaphragm is reduced
- This reduction in pressure allows the weight on the diaphragm to fall, opening the valve and seat, pressurising the installation with gas
- With the gas flowing the pressure is permitted to reach a pressure equal to the downward force of the weight
- The opening between the valve and seat will be automatically adjusted until a constant pressure is achieved based upon the flow rate of gas
- As the gas rate is altered, so will the valve position so as to maintain the outlet working pressure.

Module 7: Checking and/or Setting Meter Regulators

The Principles of Operation of Gas Regulators

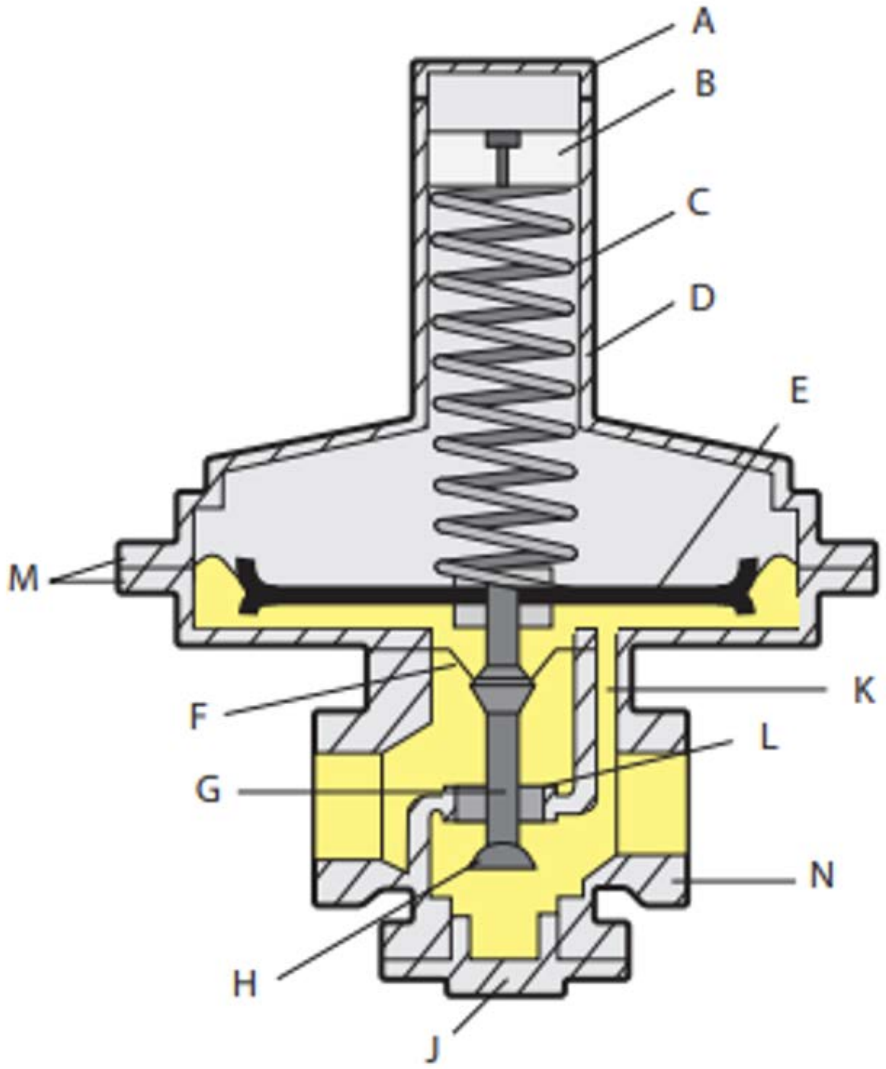

Compensated Meter Regulator

A. Cover cap with breather hole
B. Spring pressure adjuster
C. Compression spring
D. Spring housing
E. Diaphragm assembly
F. Auxiliary diaphragm
G. Valve stem
H. Valve
J. Alternative outlet
K. Impulse pipe
L. Valve seating
M. Diaphragm casings
N. Body

Module 7: Checking and/or Setting Meter Regulators

Operation of the Compensated Regulator

- Once the gas has passed the valve and seat, it fills the installation and is passed through the impulse pipe to the underside of the main diaphragm

- The main diaphragm controls the pressure in the same way as in the simple weight loaded regulator, and the outlet working pressure is kept constant across all gas rates

- One of the most noticeable ways in which this regulator is different from the simple weight loaded device is that outlet working pressure can be altered easily.

Module 7: Checking and/or Setting Meter Regulators

Operation of the Compensated Regulator

- The factor that regulates the outlet pressure is the force acting down on the diaphragm
- The greater the force acting down, the greater will be the outlet pressure and vice versa
- To alter the outlet pressure it is important that gas is flowing (working pressure), as setting the pressure when no gas is flowing (standing pressure) is not accurate
- This is because the regulator is designed to maintain working pressure.

Module 7: Checking and/or Setting Meter Regulators

Altering Outlet Working Pressure of Spring-Loaded Regulators

- To increase the outlet pressure the adjuster screw must be screwed clockwise
- To reduce the outlet working pressure the adjuster screw must be turned anticlockwise
- This is carried out with appliances running
- It is important to ensure at this stage that any pressure reading device (e.g., U gauge) is calibrated or zeroed, as incorrect readings could be dangerous
- A specific procedure is given in the BPEC manual for checking and altering meter regulators
- It highlights the parameters that must be achieved in terms of flow. The safety procedures that must be adhered to are also outlined.

Module 7: Checking and/or Setting Meter Regulators

When checking the standing pressure of a meter regulator the following procedure should be used as a guide:

- Ensure all appliances are turned off
- Connect the gauge which has been zeroed to the meter test point
- Where necessary carry out a tightness test of the supply and appliances
- If the supply is off, turn on the supply slowly to prevent the water being blown out of the gauge.

Module 7: Checking and/or Setting Meter Regulators

- Check the standing pressure; this is the measured pressure when no gas is flowing (all appliances turned off)

- Standing pressure should only be used as a guide and not used as a basis for either contacting the Gas Emergency Service or altering the pressure

Setting the regulator pressure when installing, exchanging, or relocating a gas meter (BS 6400-1)

The current BS 6400-1– Specification for installation, exchange, relocation and removal of gas meters with a maximum capacity not exceeding 6m^3/h. – Part 1: Low pressure (2nd family gases) states the following when commissioning a meter installation and checking the meter regulator settings:

- The installer shall ensure the following:
    - The regulator gives an operating pressure at the outlet of the meter of between 19mbar and 23mbar at corresponding flow rates between 6m^3/h and 0.5m^3/h. If the pressure is outside this range an OAMI who has been authorised by the gas transporter shall ensure that sufficient appliances (usually the largest connected appliance, see Table 1 in the BPEC manual) shall be lit to achieve a gas flow rate of at least 0.5m^3/h but preferably nearer to 3m^3/h. An OAMI shall remove the seal and adjust the regulator until the pressure gauge reads 21mbar. Following any adjustment by an OAMI, the regulator shall be sealed to prevent any unauthorised adjustment with a seal marked with the OAMI's registration number.

Domestic supply capacity and operating pressure at the outlet of the meter IGEM/G/13

Following complaints raised by installers regarding the inconsistency of responses to reports of low working pressure at the meter outlet, an industry working group entitled the Low Pressure Working Group facilitated by IGEM was formed to look at the problem. As a result of the consultations a new standard IGEM/G/13 – Domestic supply capacity and operating pressure at the outlet of the meter was published in September 2022. The standard deals with the following:

- limit on the nominal gas load for domestic premises in kW (Capped at a gross heat input of 65kW)
- harmonise procedures for installing appliances covering:
  - pre-commissioning
  - Commissioning
  - post commissioning

Module 7: Checking and/or Setting Meter Regulators

- Conditions for reporting low pressure supply
- Method of testing for low pressure on the installation
- Response from the Emergency Service Provider (ESP)

IGEM/G/13 essentially covers domestic supply capacity and the operating pressure at the meter outlet. The changes in some of the details conflict with current published BSI standards and established company procedures. The industry is arranging to have such information updated in line with IGEM/G/13 in due course.

Section 4 of the standard outlines the procedures to be adopted where a new appliance is to be installed to an existing installation.

Prior to the installation of the new appliance, the Registered Gas Engineer (RGE) should check the supply capacity to ensure that the existing installation is working at the correct pressures. This is carried out as detailed on the following slides

- Operate all the appliances within the premises at **“high operating load”.**

NOTE: *“High operating load”* *is the maximum operating load for the entire gas installation in the premises for a period of high demand. To replicate this the following appliances should be operated:*

  - *The highest output appliance (typically the boiler) operating at its maximum load (for combination boilers this will be the hot water demand to the taps, in which case operate all hot taps at full flow).*
  - *And any other appliances at 50% load e.g., with a 4 burner hob, only 2 burners are lit.*
- After a period of 1 minute temperature stabilisation confirm that the working pressure at the meter outlet is not less than 18.5 mbar and not exceeding 23 mbar.

The installation and commissioning of the new appliance can then be undertaken in accordance with the manufacturer’s instructions and as follows

Module 7: Checking and/or Setting Meter Regulators

- Verify the appliance inlet gas pressure as per the manufacturer's instructions – operate the installed appliance at **"Maximum Appliance Load".** The value shall be as specified by the manufacturer.

Note: ***"Maximum appliance load"*** *This is as specified by the manufacturer in the commissioning instructions e.g., commissioning/chimney sweep mode, or where not specified the appliance is operating at its maximum appliance load e.g., hot water mode on a combination boiler.*

On completion of the commissioning process **all** of the appliances shall be operated within the premises at **"high operating load"** and a reading taken to confirm that the outlet pressure of the meter after a one-minute stabilisation period is not less than 18.5 mbar and not exceeding 23 mbar.

This confirms that the newly installed appliance is not adversely affecting the gas installation.

Module 7: Checking and/or Setting Meter Regulators

Section 5 of the standard deals with the conditions for reporting low pressure supply. It recognises that during the course of their work RGEs may encounter reports of low pressure or may be unable to achieve an appliance's required inlet pressure and/or heat input. In such circumstances it states that:

- the RGE should operate all of the appliances within the premises at **"high operating load"**
- after a one-minute temperature stabilisation period, take readings to confirm that the outlet pressure at the meter is not less than 18.5 mbar and does not exceed 23 mbar
- Should the working pressure be outside the above range, contact the National Gas Emergency Service on 0800 111 999 or for Northern Ireland Gas Emergency Service on 0800 002 001

Module 7: Checking and/or Setting Meter Regulators

- The RGE should:
  - Obtain a “Reference Number” for the telephone call.
  - Provide their Gas Safe registration number, if requested
  - Provide their contact telephone number
- The Emergency Service Provider (ESP) should attend site within 2 hours.
- If possible the RGE should wait for the ESP to attend (if the appliance is new, the RGE shall wait for the ESP or arrange to attend site with the ESP to enable a joint investigation)

Where it is not possible for the RGE to wait, their job report should contain:

- Confirmation that the internal installation pipework is correctly sized
- The working pressure measurements taken
- Any recent changes to the installation e.g., new appliances, meter position moved
- The internal installation’s gas load

And the following actions are required, as appropriate:

i. For an existing appliance, which affects the safe operation of any appliance e.g., combustion and/or flame stability the appliance shall be made safe in accordance with IGEM/G/11, the Gas Industry Unsafe Situations Procedure (GIUSP).
ii. Where the installation is new, the appliance must be disconnected from the supply and sealed with an appropriate fitting(s) in accordance with Regulation 26(5) of the Gas Safety (Installation & Use) Regulations as an uncommissioned appliance (*Note if this action is to be taken the RGE will need to be available to enable the ESP engineer to undertake a joint investigation).*

- The ESP takes overall responsibility for investigating the pressure issues, but where possible, the initial testing should be a joint investigation. The ESP shall share the outcome of the investigation with the customer and RGE, as appropriate.

Module 7: Checking and/or Setting Meter Regulators

Identification of Medium Pressure Meter/Regulator Installations



An MP to LP regulator

Medium pressure is above 75mb but below 2 bar

Low pressure is up to 75mb

http://www.mesura.com/product-category/residential-use/

Module 7: Checking and/or Setting Meter Regulators

Warning Notices

- There is a requirement for durable warning labels to be fitted adjacent to the meter
- Where medium pressure is used, additional safety controls are fitted to provide over pressure protection to the meter and downstream system
- Gas operatives need to be aware of medium to low pressure installations and be able to identify the component parts which make up a typical medium to low pressure meter installation.

Module 7: Checking and/or Setting Meter Regulators

Location of Medium to Low Pressure Fed Meter Installations

Medium to low pressure fed meter installations need to be located outside of the property, either in:

1. A surface mounted meter box

2. A built in (flush mounted) meter box

3. A purpose-built housing

Purpose-built housing must comply with all relevant statuary regulations.

Module 7: Checking and/or Setting Meter Regulators

Location of Medium to Low Pressure Fed Meter Installations



Module 7: Checking and/or Setting Meter Regulators

Common Faults on Regulators

Symptom displayed	Possible cause	Remedy to rectify
Gas escape from breather	Punctured main diaphragm	Replace diaphragm or regulator
No gas pressure from regulator	Broken spring	Replace spring or regulator
No gas pressure from regulator	Regulator fitted backwards	Refit regulator
High working pressure at low gas rates	Debris on valve seating	Clean valve seating or replace regulator
Low or high working pressure	Blocked breather hole	Unblock breather hole

These are only a few of the problems and their causes from regulators, but it is hoped they may be of use in the future.

Remember

A regulator's duty is to maintain a set working pressure over a range of gas rates. Regulators may lock up between 3 and 5mbar above the working pressure set point, however, this will vary with the speed at which the gas is turned on. To check whether a regulator is working correctly two checks will be required:

1. Check the standing pressure with no appliances working – this should be no more than 27.5mbar maximum. A standing pressure greater than this may indicate a failure of the regulator.
2. Check the working pressure at the meter with appliances working – this should be 21mbar ± 2mbar.

This table highlights some common symptoms, the fault causing the symptom and the remedy.

Module 7: Checking and/or Setting Meter Regulators

Remember

To check whether a regulator is working correctly, two checks will be required:

1. Check the standing pressure with no appliances working - this should be no more than 27.5mbar maximum. A standing pressure greater than this may indicate a failure of the regulator

2. Check the working pressure at the meter with appliances working - this should be 21mbar ± 2mbar.